RAL 2035 - 2335 - 2535

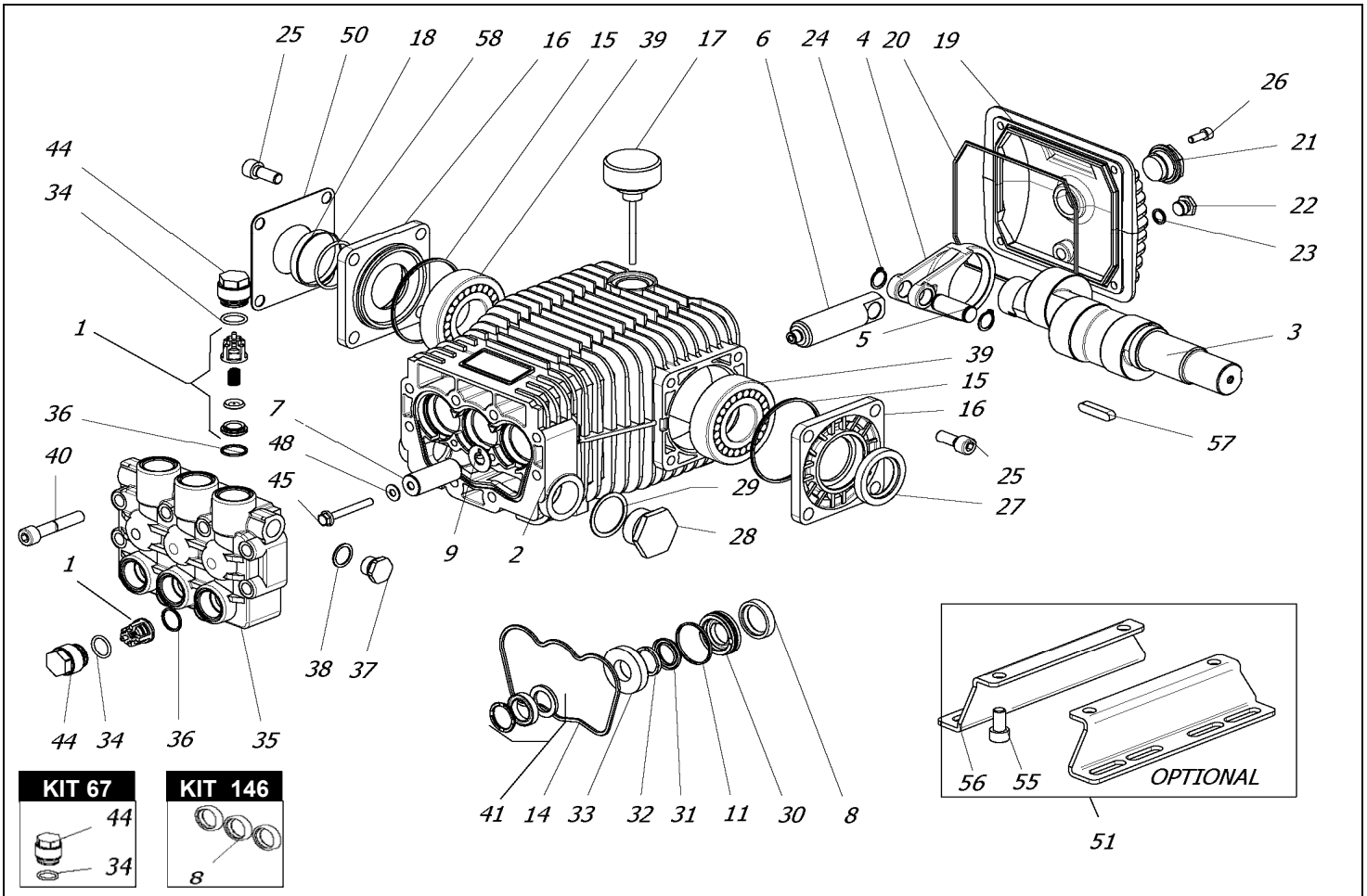

KIT 164

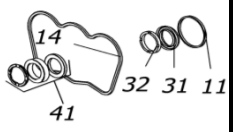

KIT 165

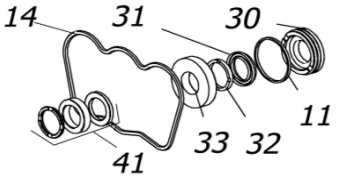

KIT 123

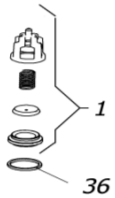

KIT 147

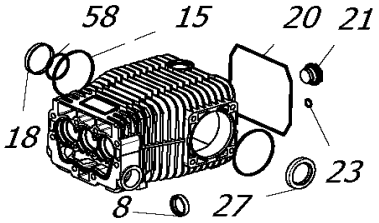

POS.	CODICE PART NO. RÉF.	DENOMINAZIONE - DESCRIPTION - *DESCRIPTION*	Q.TY
1-kit 123	069846973	VALVES ASSEMBLY	6
2	080001092	PUMP CRANKCASE	1
3	080038262	CRANKSHAFT RAL 2535	1
3	080037262	CRANKSHAFT RAL 2335	1
3	080036262	CRANKSHAFT RAL 2035	1
4	080007112	CONNECTING ROD	3
5	060007492	PISTON PIN	3
6	080071512	PLUNGER ROD	3
7	080070182	CERAMIC PISTON D.20	3
8-kit 146-147	802092002	OIL SEAL D25	3
9	843826002	WASHER	3
11-kit 164-165	803080102	O-RING	3
14-kit 164-165	080021312	PARTICULAR PROFILE GASKET	1
15-kit 147	803210642	O-RING	2
16	060017092	BEARING COVER	2
17	060020322	OIL FILLER PLUG WITH DIP STICK	1
18-kit 147	060019322	OIL SIGHT GLASS (FROM 06/2020)	1
18	060059322	OIL SIGHT GLASS (BEFORE 06/2020)	1
19	080006092	CRANKCASE COVER	1
20-kit 147	803210882	O-RING	1
21-kit 147	853515502	OIL SIGHT GLASS + O-RING	1
22	852543502	PLUG G1/4X9	1
23-kit 147	803057002	O-RING	1
24	801099002	CIRCLIP	6
25	863265002	BOLT	8
26	862108002	BOLT	4
27-kit 147	802143002	OIL SEAL	1
28	852712002	PLUG G1	1
28	852712532	PLUG G1 BRASS (OPTIONAL)	1
29	824230002	GASKET	1
30-kit 165	080015532	BACK GLAND D20	3
31-kit 165-164	802064002	"V" PACKING 18X28	3

POS.	CODICE PART NO. RÉF.	DENOMINAZIONE - DESCRIPTION - *DESCRIPTION*	Q.TY
32-kit 165-164	380392322	THRUST RING	3
33-kit 165	080018532	FRONT GLAND D20	3
34-kit 67	803182802	O-RING	6
35	080008282	PUMP HEAD	1
36-kit 123	803182802	O-RING	6
37	852579002	PLUG G3/8	1
37	852579532	PLUG G3/8 BRASS (OPTIONAL)	1
38	824109002	GASKET	1
39	812870002	BEARING	2
40	863510002	BOLT	8
41-kit 164-165	802066302	SUPER "U" PACKING ASSEMBLY	3
44	070040532	EX. DEEP SEALING VALVE CAP M27x1,5 (before 10/2020)	6
44-kit 67	070040282	EX. DEEP SEALING VALVE CAP M27x1,5 (from 10/2020)	6
45	862401002	BOLT	3
48	843620052	WASHER	3
50	060123612	SHEET	1
51	089829973	MOUNTING RAILS KIT (OPTIONAL)	1
55	863212002	BOLT	4
56	080053612	MOUNTING RAIL (OPTIONAL)	2
57	806534002	TAB 8X7X35	1
58-kit 147	803262002	O-RING (FROM 06/2020)	1
58	803265002	O-RING (BEFORE 06/2020)	1
REPAIR KIT		**ITEM NO,s INCLUDED**	**PCS.**
kit 67	049839973	SPARE PARTS KIT	12
kit 146	089816973	SPARE PARTS KIT	3
kit 147	089817973	SPARE PARTS KIT	11
kit 123	069867973	SPARE PARTS KIT	12
kit 164	089835973	SPARE PARTS KIT	19
kit 165	089836973	SPARE PARTS KIT	25
HOT WATER CONVERSION KIT (85°C-185°F)			
kit 219	089844973	H.W. PACKING SEALING KIT	21
kit 249	069956973	H.W. VALVE KIT	18