CK 2216 - 2220

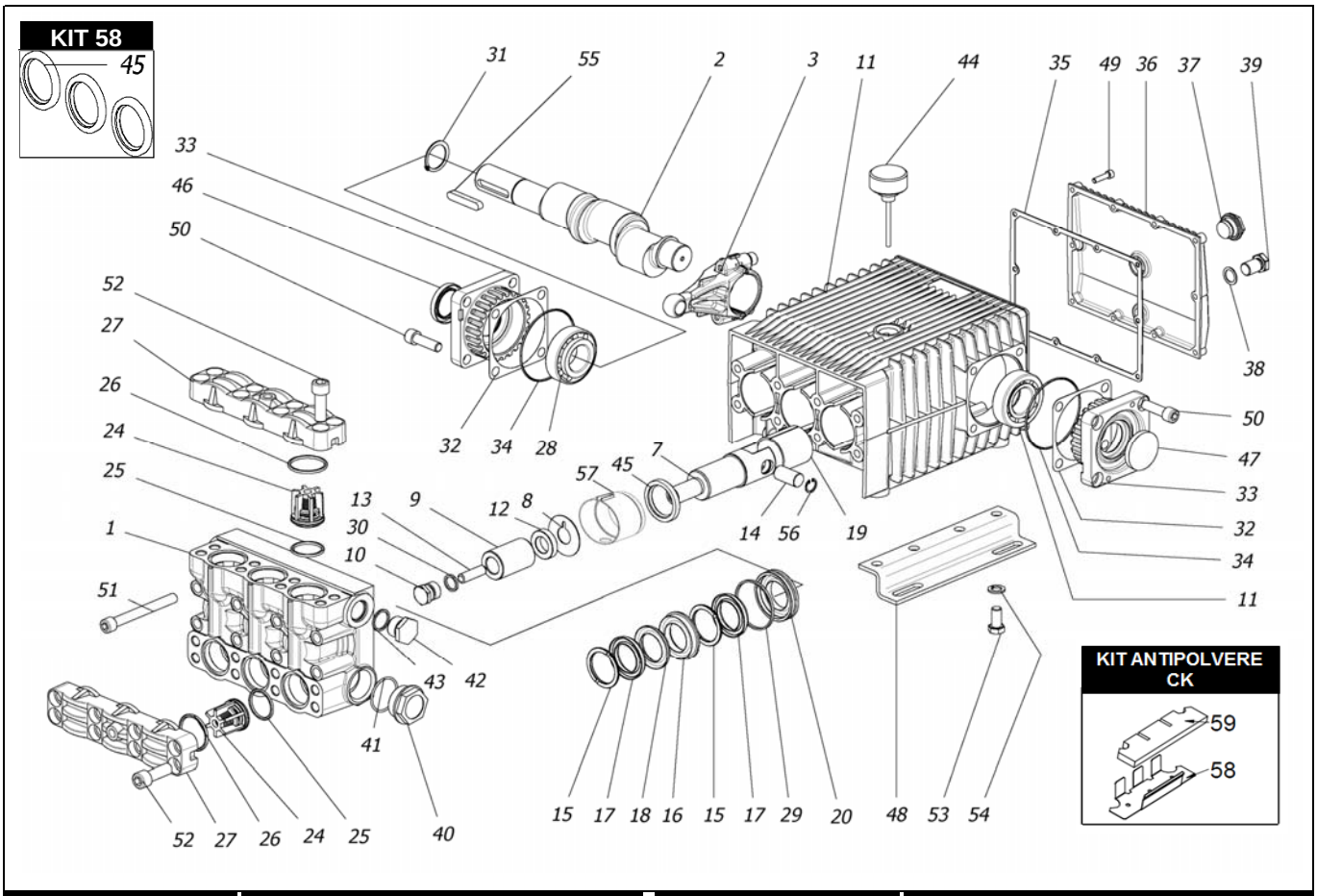

KIT 47

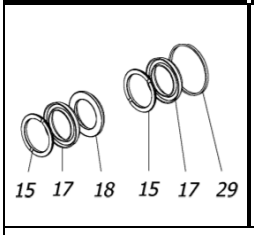

KIT 46

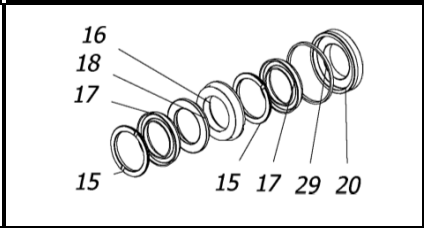

KIT 44

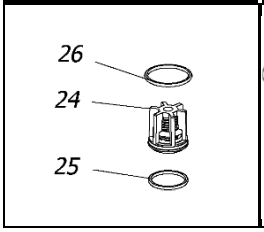

KIT 171

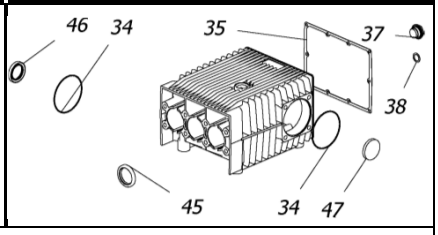

POS.	CODICE PART NO. RÉF.	DENOMINAZIONE - DESCRIPTION - *DESCRIPTION*	Q.TY
1	730333282	PUMP HEAD	1
2	730319262	CRANKSHAFT D.35 (CK 2216) (until 07/17)	1
2	730359262	CRANKSHAFT D.45 (CK 2216) (from 07/17)	1
2	730037262	CRANKSHAFT D.35 (CK 2220) (until 07/17)	1
2	730360262	CRANKSHAFT D.45 (CK 2220) (from 07/17)	1
3	730417112	CONROD	3
7	730426512	PLUNGER ROD	3
8	730305652	WASHER	3
9	730310182	CERAMIC PISTON	3
10	730051532	PLUG	3
11	730524092	CRANKCASE	1
12	730424532	SPACER	3
13	863900002	SCREW	3
14	852007402	PISTON PIN	3
15 -Kit 46-47	730309322	THRUST PIN	6
16 -Kit 46	730307532	FRONT GLAND	3
17 -Kit 46-47	802165002	V PACKING DIA. 30-45	6
18 -Kit 46-47	730035322	ANTIEXTRUSION RING	3
19	804470002	BUSHING	3
20 -Kit 46	730446532	BACK GLAND	3
24 -Kit 44	739824973	VALVES ASSY	6
25 -Kit 44	803253002	O-RING	6
26 -Kit 44	803263002	O-RING	6
27	730126282	VALVES COVER	2
28	812859002	BEARING D. 35X72 (until 07/17)	2
28	812940002	BEARING D. 45X80 (from 07/17)	2
29 -Kit 46-47	803283002	O-RING	3
30	803182502	O-RING	3
31	801264002	SNAP RING	1
32	730413652	SHIM 0.1	1
32	730414652	SHIM 0.2	2
33	730476092	BEARING SUPPORT D.72 (until 07/17)	2
33	730477092	BEARING SUPPORT D.80 (from 07/17)	2
34 -Kit 171	803210672	O-RING	2
35 -Kit 171	730065722	GASKET	1

POS.	CODICE PART NO. RÉF.	DENOMINAZIONE - DESCRIPTION - *DESCRIPTION*	Q.TY
36	730475092	BACK COVER	1
37 -Kit 171	853515502	OIL SIGHT GLASS	1
38 -Kit 171	824107002	GASKET	1
39	852579002	PLUG G 3/8	1
40	852740532	PLUG G1"1/4	1
41	803209002	O-RING	1
42	852693532	PLUG G3/4	1
43	803218002	O-RING	1
44	853516002	OIL FILLER PLUG	1
45 -Kit 58-171	802180002	OIL SEAL	3
46 -Kit 171	802143002	OIL SEAL	1
47 -Kit 171	802099602	CAP	1
48	730024612	MOUNTING RAIL	2
49	862216002	BOLT	10
50	863910002	BOLT	8
51	864120002	BOLT	8
52	864200002	BOLT	16
53	863703002	BOLT	6
54	843844002	WASHER	6
55	806585002	TAB	1
56	801137002	SNAP RING D. 18	6
57	730528322	OIL SEAL SPACER (FORM 09/13)	3
58 - DUST KIT CK	730531612	DUST SHEET	1
59 - DUST KIT CK	730531722	DUST FILTER	1

REPAIR KIT	ITEM NO,s INCLUDED		PCS.
KIT 44	739835973	SPARE PARTS KIT	18
KIT 46	739836973	SPARE PARTS KIT	24
KIT 47	739837973	SPARE PARTS KIT	18
KIT 58	739842973	SPARE PARTS KIT	3
DUST KIT CK	730531973	SPARE PARTS KIT	2
KIT 171	739872973	SPARE PARTS KIT	10
HOT WATER CONVERSION KIT (85°C-185°F)			
kit 203	739874973	H.W. PACKING SEALING KIT	24
kit 251	739916973	H.W. VALVE KIT	18